DETAIL KIT / DIMMER / LINEAR

ACTION: DETAIL KIT

KNURL: LINEAR

RANGE: DETAIL KIT

Our NEW Linear knurl dimmer switch detail kit made from solid metal, complete with dimmer nut and torx screws. To be teamed up with our dimmer modules and wall plates to complete your custom electricity product.





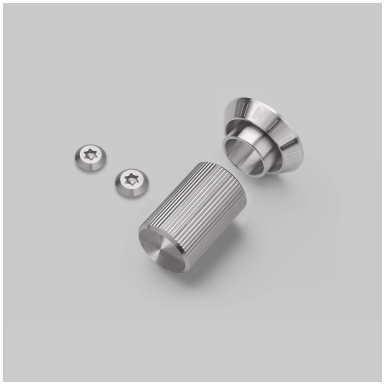



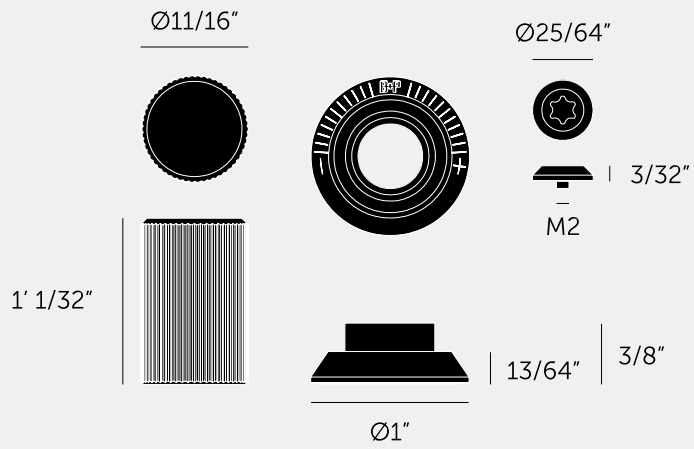

SPECIFICATIONS

INCLUDED

1 x Dimmer Detail Kit

PLEASE NOTE

DISCLAIMER: Always consult a trade professional when installing this product. Buster + Punch is not responsible for the usage or feasibility of installation requirements. This product is not suitable for damp or wet environments.

FINISH & SKU NUMBERS

sku:	finish:	size:
NDK-024522	black	1G
NDK-054522	brass	1G
NDK-454522	smoked bronze	1G
NDK-074522	steel	1G
NDK-144522	white	1G

CARE INSTRUCTIONS

Wipe with a dry lint free cloth with no loose hairs, avoid using any chemicals. Please note that finishes may age naturally with time and regular use.