LUMINAIRE Galarneau

Product Specification

Dimen-sion	 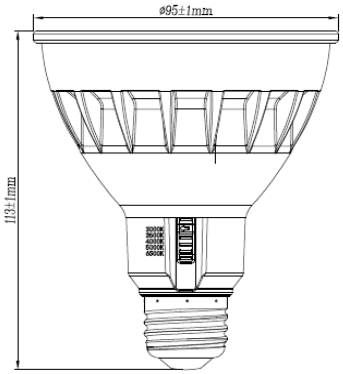 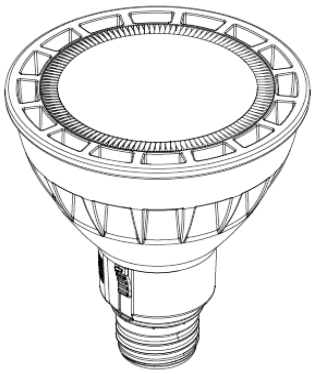

Ⅰ. **Basic Data**		
1	Product Name	Metal PAR30 Long Neck Led Lamp-5CCT
2	Model No.	L7PAR30LD24WCCOB5CCT
3	Base(standard designation)	E26
4	Dimmable	Dimmable
5	Application:	Indoor use（Not suitable for totally-enclosed luminaire）
Ⅱ. **Electrical Data**		
1	Rated Voltage (Product)	90-277Vac
2	Rated Frequency	60Hz
3	Nominal Wattage	24W
4	Nominal Current	270mA
5	Power Factor	≥0.7
Ⅲ. **Light Technical Data**		
1	Color Temperature	5CCT adjustable:2700K/3000K/3500K/4000K/5000K
2	Luminous Flux	2300lm
3	Beam Angle	40°
4	Color Rendering Index	Ra80
Ⅳ. **Lifespan**		
1	Average Lifetime:	25000h
Ⅴ. **Other**		
1	Protection Level	IP20
2	Operating Temperature	-20～40℃
3	Humidity	25±2°C, ≤90%

Ⅶ. **Configurable Material**

Cap-Base	Lamp Heatsink	Lamp Lens
Nickel plated copper	Aluminium alloy	PC

Ⅶ. **Packing**

	Packaging Type	Inner Packing (pcs)	Dimension L×W×H(mm)	N.W (kgs)	G.W (kgs)	CBM
Color Box	Box	1pcs	101x101X129mm	0.348	0.383	0.0013
Outer Carton	Carton	20pcs	527x421X157mm	8.38	9.8	0.0348