Cove | 67795WT

Job Name:_____ Job Type:_____ Quantity:_____ Comments:_____

PRODUCT DESCRIPTION

The Cove Series offers versatile LED recessed downlighting with a focus on innovative design and easy installation. Featuring a compact remote driver and IC Airtight UL-rated outlet box, Cove eliminates the need for traditional recessed housing, streamlining installation for residential and commercial applications. Its unique concave lens reduces glare by directing light upward, reflecting it back down to deliver smooth, even illumination. Available in multiple sizes, the Cove Series combines modern technology with sleek performance, offering a reliable solution for any lighting environment.

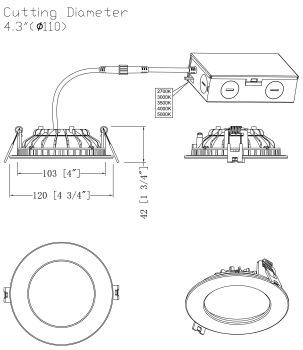

MEASUREMENTS

DIMENSION	: 4.75" L x 4.75" W x 1.75" H
HANGING WEIGHT	: 0.726 lb

LAMPING

INPUT VOLTAGE	: 120-277V
LUMENS	: 1,300 Rated (750 Del.)
BULB	: 1 x 12W LED DC Intergrated , 12W Total
BULB INCLUDED	: (Integrated)
DIMMABLE	: Triac CL
CRI	: 90 CRI
COLOR_TEMP	: 27-30-35-40-50K

FINISHES OPTION

White (WT)

MATERIAL

Aluminum, Steel

RATINGS

cETLus
Damp Location
CA Title 24

ADDITIONAL

RATED LIFE 35000 Hours
OPERATING TEMPERATURE:
-20°C (-4°F), 40°C (104°F)

PHOTOMETIC: Report Found Online

Always consult a qualified electrician before installing any lighting product.

MAXIM LIGHTING

WESTERN DISTRIBUTION CENTER (HEADQUARTER)
253 NORTH VINELAND AVE I CITY OF INDUSTRY, CA 91746

EASTERN DISTRIBUTION CENTER
101 GARDNER PARK | PEACHTREE CITY, GA 30269

P. 626.956.4200 I F. 626.956.4225 I maximlighting.com