Cliffsedge VX | 42132BK

Job Name:_____ Job Type:_____ Quantity:_____ Comments:_____

PRODUCT DESCRIPTION

This slim architectural outdoor sconce delivers bold modern illumination with uncompromising durability. Crafted from Maxim's proprietary Vivex composite, it is engineered to withstand harsh climates, resisting corrosion, fading, heat, and extreme coastal conditions. Clean lines and a precision-cut profile cast crisp downward LED light with strong control. Designed for longevity and visual impact, Cliffsedge VX adds an edgy modern accent to exterior walls and entries.

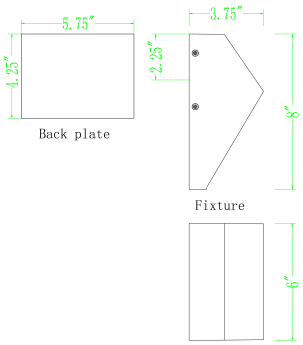

MEASUREMENTS

DIMENSION	: 6" W x 8" H x 3.75" Ext
BACK PLATE	: 5.75" W x 4.25" H x 2.25" HCO
HANGING WEIGHT	: 1.43 lb

LAMPING

INPUT VOLTAGE	: 120-277V
LUMENS	: 835 Rated (220 Del.)
BULB	: 1 x 8W LED PCB Integrated , 8W Total
BULB INCLUDED	: (Integrated)
DIMMABLE	: TriacÂ orÂ ELVÂ atÂ 120V
CRI	: 90 CRI
COLOR_TEMP	: 22-27-30-35-40K
LIGHTING_DIRECTION	: Down

FINISHES OPTION

Black (BK)

MATERIAL

EPMM,Aluminum,

RATINGS

cETLus
Wet Location
ADA

ADDITIONAL

INSTALL UP/DOWN: Down
RATED LIFE 35000 Hours
OPERATING TEMPERATURE:
-20°C (-4°F), 40°C (104°F)

Always consult a qualified electrician before installing any lighting product.

MAXIM LIGHTING

WESTERN DISTRIBUTION CENTER (HEADQUARTER)
253 NORTH VINELAND AVE I CITY OF INDUSTRY, CA 91746

EASTERN DISTRIBUTION CENTER
101 GARDNER PARK | PEACHTREE CITY, GA 30269

P. 626.956.4200 I F. 626.956.4225 I maximlighting.com