Julip | 21541CRSN

Job Name:_____ Job Type:_____ Quantity:_____ Comments:_____

PRODUCT DESCRIPTION

Julip brings a sense of nostalgia to the bath through softly traditional forms refined for today's interiors. Clear ribbed bell-shaped glass shades create sparkling texture and beautifully diffuse illumination, while the streamlined metalwork offers a lighter, more tailored interpretation of classic design. Decorative details at the socket add a subtle heritage influence without feeling ornate, striking a balance between timeless character and everyday versatility. Available in Satin Nickel, Dark Bronze, and Natural Aged Brass, Julip complements a wide range of transitional, farmhouse, and traditional spaces.

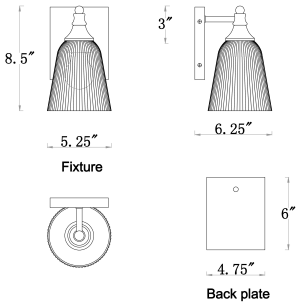

MEASUREMENTS

DIMENSION	: 5.25" W x 8.5" H x 6.25" Ext
BACK PLATE	: 4.75" W x 6" H x 3" HCO
HANGING WEIGHT	: 2.2 lb

LAMPING

INPUT VOLTAGE	: 120V
BULB	: 1 x 60W Incandescent E26 Medium , 60W Total
BULB INCLUDED	: (Not Included)
DIMMABLE	: Triac or ELV
LIGHTING_DIRECTION	: Up/Down

FINISHES OPTION

- Dark Bronze (DBZ)
- Natural Aged Brass (NAB)
- Satin Nickel (SN)

GLASS

Clear Ribbed CR

MATERIAL

Steel, Glass

RATINGS

cETLus
Damp Location

ADDITIONAL

INSTALL UP/DOWN: Up/Down
OPERATING TEMPERATURE:
-20°C (-4°F), 40°C (104°F)

Always consult a qualified electrician before installing any lighting product.

MAXIM LIGHTING

WESTERN DISTRIBUTION CENTER (HEADQUARTER)
253 NORTH VINELAND AVE I CITY OF INDUSTRY, CA 91746

EASTERN DISTRIBUTION CENTER
101 GARDNER PARK | PEACHTREE CITY, GA 30269

P. 626.956.4200 I F. 626.956.4225 I maximlighting.com