Hollis | 21421GWNAB

Job Name:_____ Job Type:_____ Quantity:_____ Comments:_____

PRODUCT DESCRIPTION

Rooted in nostalgic farmhouse styling, Hollis brings warmth and familiarity through thoughtfully crafted details and timeless forms. A decorative yoke gracefully supports glossy enamel shades in Glossy White or Glossy Black, while curved arms and refined metalwork lend a sense of heritage and character. Available as a 12" pendant and coordinating bath sconces, the collection strikes a balance between vintage inspiration and everyday versatility. Finished in Natural Aged Brass, Hollis delivers inviting charm with an elevated, tailored feel.

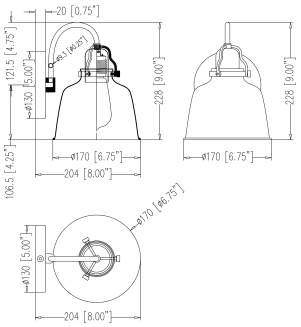

MEASUREMENTS

DIMENSION	: 6.75" W x 9" H x 8" Ext
MAX OAH	: 5" W x 5" H
HANGING WEIGHT	: 1.8 lb

LAMPING

INPUT VOLTAGE	: 120V
BULB	: 1 x 60W Incandescent E26 Medium , 60W Total
BULB INCLUDED	: (Not Included)
DIMMABLE	: Triac or ELV
LIGHTING_DIRECTION	: Up/Down

FINISHES OPTION

Natural Aged Brass (NAB)

MATERIAL

Steel

RATINGS

cULus
Damp Location

ADDITIONAL

INSTALL UP/DOWN: Up/Down
OPERATING TEMPERATURE:
-20°C (-4°F), 40°C (104°F)

Always consult a qualified electrician before installing any lighting product.

MAXIM® LIGHTING

WESTERN DISTRIBUTION CENTER (HEADQUARTER)
253 NORTH VINELAND AVE I CITY OF INDUSTRY, CA 91746

EASTERN DISTRIBUTION CENTER
101 GARDNER PARK | PEACHTREE CITY, GA 30269

P. 626.956.4200 I F. 626.956.4225 I maximlighting.com