Slab | 18214WANAB

Job Name:_____ Job Type:_____ Quantity:_____ Comments:_____

PRODUCT DESCRIPTION

Natural stone and simple geometry come together in Slab, a collection that transforms Spanish alabaster into a luminous architectural statement. Backlit LED illumination reveals the stone's delicate veining and natural translucency, creating a warm glow that feels both refined and organic. The clean circular form allows the material to take center stage, while Dark Bronze and Natural Aged Brass finishes provide a sophisticated framework. Offered in four diameters ranging from intimate accent sizes to larger statement pieces, Slab brings timeless elegance and material richness to modern interiors.

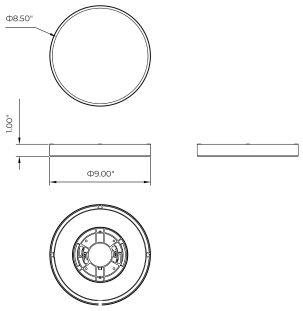

MEASUREMENTS

DIMENSION	: 9" L x 9" W x 1" H
HANGING WEIGHT	: 1.34 lb

LAMPING

INPUT VOLTAGE	: 120V
LUMENS	: 1,100 Rated (780 Del.)
BULB	: 1 x 18W LED AC Intergrated , 18W Total
BULB INCLUDED	: (Integrated)
DIMMABLE	: Triac or ELV
CRI	: 90 CRI
COLOR_TEMP	: 27-30-35-40-50K

FINISHES OPTION

Dark Bronze (DBZ)

Natural Aged Brass (NAB)

GLASS

White Alabaster WA

MATERIAL

Steel, PC

RATINGS

cETLus

Damp Location

ADDITIONAL

RATED LIFE 50000 Hours

OPERATING TEMPERATURE:

-20°C (-4°F), 40°C (104°F)

Always consult a qualified electrician before installing any lighting product.

MAXIM® LIGHTING

WESTERN DISTRIBUTION CENTER (HEADQUARTER)
253 NORTH VINELAND AVE I CITY OF INDUSTRY, CA 91746

EASTERN DISTRIBUTION CENTER
101 GARDNER PARK | PEACHTREE CITY, GA 30269

P. 626.956.4200 I F. 626.956.4225 I maximlighting.com