Valette | 12861NAB

Job Name:_____ Job Type:_____ Quantity:_____ Comments:_____

PRODUCT DESCRIPTION

Inspired by the enduring elegance of Williamsburg chandeliers, this collection reinterprets a beloved American classic through a fresh, coastal lens. Graceful arms sweep from a central sphere, supporting hand-strung bleached rope shades that bring warmth, texture, and artisanal character. Finished in Natural Aged Brass, the metalwork provides a refined foundation, while oversized ball finials crown each shade with a modern decorative touch. Blending French country charm, classic Americana, and relaxed coastal influence, the collection feels both familiar and newly relevant.

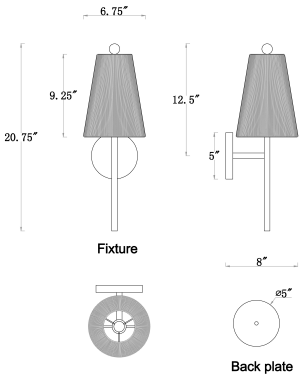

MEASUREMENTS

DIMENSION	: 6.75" W x 20.75" H x 8" Ext
MAX OAH	: 5" W x 5" H
HANGING WEIGHT	: 2.2 lb

LAMPING

INPUT VOLTAGE	: 120V
BULB	: 1 x 60W Incandescent E26 Medium , 120W Total
BULB INCLUDED	: (Not Included)
DIMMABLE	: Triac or ELV
LIGHTING_DIRECTION	: Up/Down

FINISHES OPTION

Natural Aged Brass (NAB)

MATERIAL

Steel, Cotton

RATINGS

cETLus
Dry Location

ADDITIONAL

INSTALL UP/DOWN: Up/Down
OPERATING TEMPERATURE:
-20°C (-4°F), 40°C (104°F)

Always consult a qualified electrician before installing any lighting product.

MAXIM LIGHTING

WESTERN DISTRIBUTION CENTER (HEADQUARTER)
253 NORTH VINELAND AVE I CITY OF INDUSTRY, CA 91746

EASTERN DISTRIBUTION CENTER
101 GARDNER PARK | PEACHTREE CITY, GA 30269

P. 626.956.4200 I F. 626.956.4225 I maximlighting.com