FINISH (WHITE)			
1/8 IPS NIPPLE, 1	1	PIECE	E
THK CHECK RING 16mm DIA X 6mm HT W/ 10.3mm DIA HOLE	1	PIECE	B
UPLING 1/2" DIA x 1" HT w/ 1/8 IPS TAP	1	PIECE	B
SQUARE TUBE, 5/8 X 12MM	0.2	FEET	E
SQUARE TUBE, 1/2" X 12MM	1.5	FEET	E
SQUARE BAR, 12.5MM	8.4	FEET	E
BI#16 FLAT CAP 1/2"DIA	3	PIECE	M
P-IN BUSHING, BLACK .313-5/16" HOLE	1	PIECE	E
ACK POLARIZED SPT CORDSET, 8FT	1	PIECE	B
I RELIEF (8SHAPE) WITH 7MM DIA HOLES	1	PC.	E

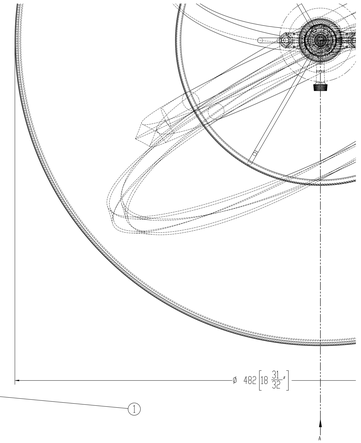

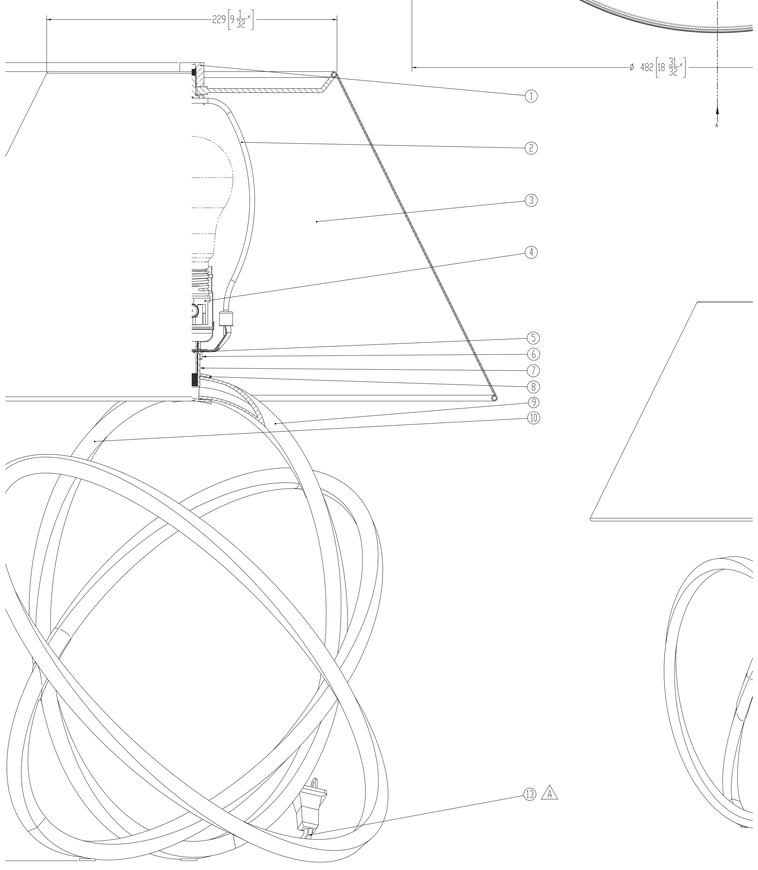

TROY LIGHTING

FORTUNA
PTL1024
Installation Instructions

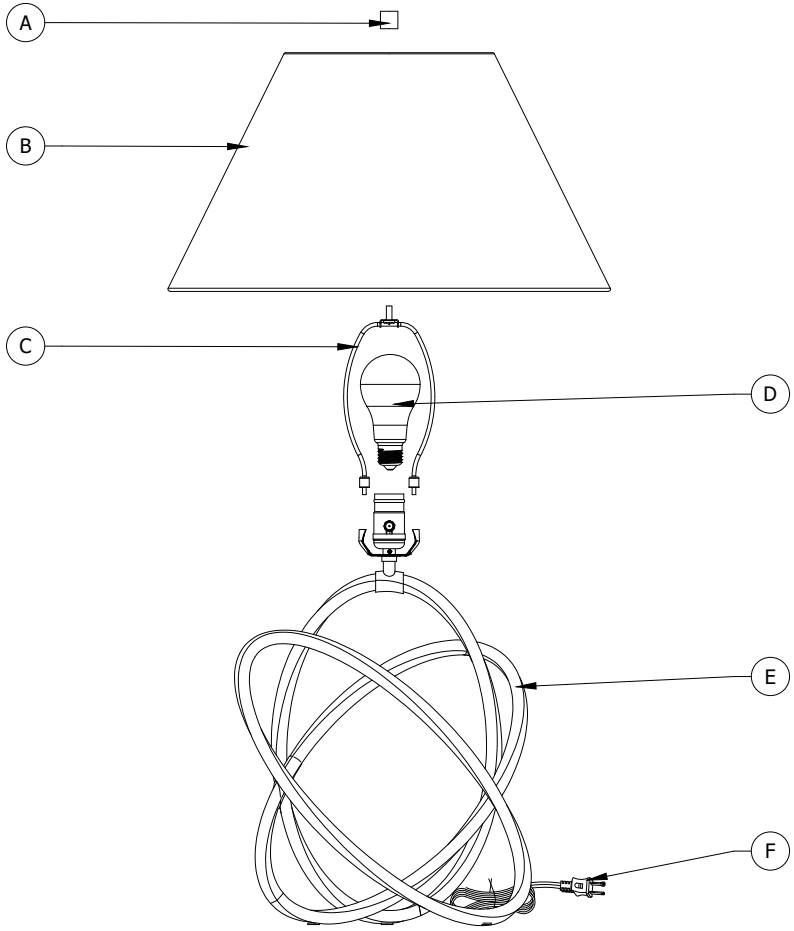

PART(S)	REPLACEMENT PART	NUMBER
A	FINIAL	FIN-PTLI024
B	SHADE	SHD-PTLI024
C	HARP	HRP-8-AGB

FIXTURE INSTALLATION

1. Insert the HARP (C) by squeezing the sides and placing on the saddle of the FIXTURE ASSEMBLY (E).
2. Screw the BULB (D) into the socket.THIS FIXTURE IS RATED FOR 75 WATT TYPE A LAMP. DO NOT EXCEED THE RECOMMENDED WATTAGE!
3. Carefully remove the protective covering over on the SHADE (B), place the SHADE (B) over the HARP (C), and secure with the FINIAL (A).
4. Plug the CORD (F) into the wall outlet. Turn the switch on the socket.