RIVERDALE

SKU | DVP46901

DVI LIGHTING

CATEGORY: Sconce

DIMENSIONS

Length / Ø: N/A"
Width: 5"
Height: 9.5"
Depth: 5.5
Minimum Height: 11"
Maximum Height: 11"

LAMPING

Number of Sockets: 1
Wattage of Individual Socket: 70
Socket Type: Medium Base
Bulbs Included: No
Orientation of Light Source: Up and/or Down
Lamp Confinement: Semi Enclosed
Voltage: 120
Dimmable: Yes

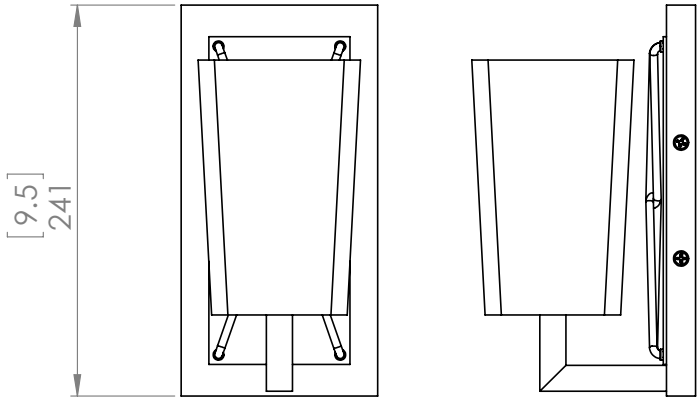

FINISH OPTIONS

Satin Nickel and Graphite with Clear Glass
Brass and Graphite with Clear Glass

WARRANTY

5 Years Residential
20,000 Hours Commercial

PIPE / CHAIN INFORMATION

Pipe/Chain Kit Available: No

ADDITIONAL INFORMATION

Location Certification: Dry Locations Only
Maximum Slope Ceiling Angle: 0
ADA Compliant: No
Wall and Ceiling Mountable: No

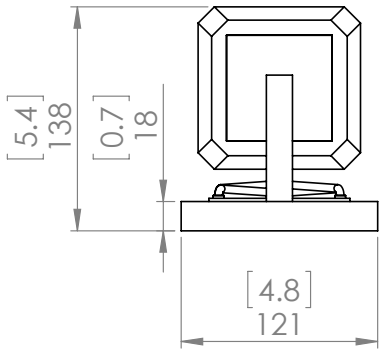

120 Great Gulf Drive, Concord, ON L4K 5W1
+1 855 384 5483 | +1 855 384 8453
customerservice@dvi.lighting
www.dvcanada.com